AUTIO GRINDERS - PROVEN PRODUCTION SOLUTIONS

AUTIO company

SPECIALIZED EQUIPMENT FOR THE FOOD INDUSTRY

FOR OVER 75 YEARS, Autio Company has provided high quality grinder solutions at an affordable cost. Each Autio grinder unit is custom manufactured for your needs, whether it be meat or poultry size reduction, product recovery, transfer or waste processing. Most Autio grinder models can be fitted with our optional rotary vane pump to grind and transfer your product in one process. We've built our reputation on reliable and cost effective equipment.



- ✓High performance
- ✓Up to 60,000 lbs/hour
- ✓Easy Clean-up & Maintenance
- ✓USDA standards
- ✓High Capacity Hoppers
- ✓Patented Screw & Barrel
- ✓Available with Pump attached
- ✓Quick Return on Investment
- ✓Custom Built to Order

CHOOSE AUTIO GRINDERS FOR ALL YOUR PRODUCTION NEEDS:

Fresh, Frozen,Meat, Poultry, Seafood

Product Recovery, Waste and Size Reduction

FOR MORE INFORMATION
OR FOR A QUOTE
CALL (800) 483-8884
or e-mail sales@autioco.com

Autio Products must be installed and operated in accordance with all applicable health and safety regulations. Guards and safety equipment are not shown in photos.

93750 Autio Loop • Astoria, Oregon 97103 USA
Phone: (503) 458-6191 • (800) 483-8884
Fax (503) 458-6409 • Web: www.autioco.com

AUTIO 1601 HEAVY DUTY GRINDER

AUTIO company

SPECIALIZED EQUIPMENT FOR THE FOOD INDUSTRY

Autio's tough, high-capacity 16" grinder handles all types of meat and food product applications, fresh or frozen, including heavy bones. No pre-cutting or hogging required. The Autio 16" grinder is available in a variety of finishes and configurations for both edible and inedible applications, with sanitary construction options to meet customer processing requirements. If you need a heavy duty, workhorse grinder for high volume, tough applications, this is the model for you!



Powerful . . . Profitable . . . Super Capacity . . . Up to 60,000 lbs. per hour!

AUTIO 16" GRINDER SPECIFICATIONS

DIAMETER OF PLATE	16"
HEIGHT	60"
WIDTH	39"
LENGTH	112"
CLEARANCE UNDER BARREL	34"
HOPPER SIZE	29"x21"
LENGTH OF SCREW	55"
WEIGHT	7,000 lbs
MOTOR SIZES	75/200 HP
CAPACITY * (LBS /HOUR)	60,000

*Capacity will vary depending on product application
Specifications subject to change without notice

7 Reasons Why you get greater production at lower cost with AUTIO 16" Grinders

- ✓ Big Capacity . . . hopper holds up to 400 lbs. at a time.
- ✓ Faster Feeding . . . automatically without clogging or jam-ups.
- ✓ No Heat Build-up or product "cooking".
- ✓ Complete grind control with patented screw and barrel design.
- ✓ Quick Easy Clean-up for efficient sanitation and maintenance.
- ✓ Operating Flexibility... 75 - 200 HP motors and varying feeds/rpm.
- ✓ Real dependability and low down-time with Falk Gear Box design.

CHOOSE AN AUTIO GRINDER FOR YOUR PRODUCTION NEEDS:

Autio Grinders are available in several models and sizes, suitable for Fresh, Frozen, Meat, Poultry, Seafood Product Recovery, Waste and Size Reduction. All models can be custom fabricated for your needs and most models can be fitted with an optional vane pump to grind and transfer your product in one application.

Autio Products must be installed and operated in accordance with all applicable health and safety regulations. Guards and safety equipment are not shown in photos.

93750 Autio Loop • Astoria, Oregon 97103 USA
Phone: (503) 458-6191 • (800) 483-8884
Fax (503) 458-6409 • Web: www.autioco.com

AUTIO GRINDER MODEL COMPARISON

AUTIO company

SPECIALIZED EQUIPMENT FOR THE FOOD INDUSTRY

CHOOSE AN AUTIO GRINDER FOR YOUR PRODUCTION NEEDS:

Autio Grinders are available in several models and sizes, suitable for Fresh, Frozen, Meat, Poultry, Seafood Product Recovery, Waste and Size Reduction. All models can be custom fabricated for your needs and most models can be fitted with an optional vane pump to grind and transfer your product in one application.

P-4 PULLEY MODEL



Low cost, high production
No gearbox required
Flywheel-style belt and pulley drive

HYDRAULIC MODEL



Dependable Hydraulic Power
Ideal for processors and factory ships
Optional Power Supply available.

GHP (GEAR HEAD PULLEY) MODEL



High capacity, High performance
Gear Box and Pulley system allows variable speeds and RPM for maximum flexibility
Dependable GearBox reduces downtime

GH (GEAR HEAD) MODEL



In-line motor mounted as Direct Drive
Fixed speed & Power
No Belts or pulleys

Autio Products must be installed and operated in accordance with all applicable health and safety regulations. Guards and safety equipment are not shown in photos.

93750 Autio Loop • Astoria, Oregon 97103 USA
Phone: (503) 458-6191 • (800) 483-8884
Fax (503) 458-6409 • Web: www.autioco.com

AUTIO GRINDER MODEL SPECIFICATIONS

AUTIO company

SPECIALIZED EQUIPMENT FOR THE FOOD INDUSTRY

From base to cutting knife, Autio Grinders are built to provide dependable, trouble-free production. Our grinders are available in 6", 8", 11" and 16" plate sizes and 15-150 hp motors, with a capacity of up to 60,000 lbs per hour! With a variety of available grinder styles, we can design a custom configuration to best suit for your production needs!

Following is a comparison of specification and performance capabilities of various Autio Grinder Models

Specification	1601	1101GH	801GH	1101GHP	801GHP	1101-H	801-H	801P4	1101P4
Diameter of Plate	16"	11"	8-5/8"	11"	8-5/8"	11"	8-5/8"	11"	8-5/8"
Height	60"	50"	50"	50 1/4"	50 1/4"	23-1/2"	23-1/2"	45"	45"
Width	39"	31"	30"	28"	28"	28"	28"	58"	58"
Length	112"	117"	107"	80-1/2"	80 1/2"	68"	68"	64"	66"
Clearance under barrel	34"	30-1/2"	30-1/2"	30"	31"	4"	4"	30"	30"
Hopper size	30 x 32"	27"x21"	27"x21"	29"x21"	29"x21"	29"x21"	29"x21"	29"x21"	29"x21"
Length of screw	55"	42"	42"	42"	42"	42"	42"	42"	42"
Weight	7000 lbs	3400 lbs	2400 lbs	2400 lbs	2200 lbs	1000 lbs	1000 lbs	1500 lbs	1500 lbs
Motor sizes	100 HP	75-100HP	25-50HP	75-100HP	25-50HP	CharLynn 10,000 Hydraulic	CharLynn 10,000 Hydraulic	15-50HP	15-50HP
Capacity *	60,000	25,000	15,000	25,000	15,000	20,000	15,000	15,000	25,000

**Capacity will vary depending on product application*

7 reasons you get
GREATER PRODUCTION at LOWER COST
with AUTIO Grinders

1. BIG CAPACITY . . . hopper holds up to 100 lbs at a time.
2. FASTER FEEDING . . . automatically without clogging or jam-ups.
3. NO HEAT BUILD-UP or product " cooking".
4. COMPLETE GRIND CONTROL with patented screw and barrel design.
5. QUICK CLEAN-UP to meet all U.S.D.A. standards
6. GREATEST FLEXIBILITY . . . 25 - 100 HP with varying feeds & RPM.
7. REAL DEPENDABILITY and no down-time with Falk Gear Box .

Autio Products must be installed and operated in accordance with all applicable health and safety regulations. Guards and safety equipment are not shown in photos.

93750 Autio Loop • Astoria, Oregon 97103 USA
Phone: (503) 458-6191 • (800) 483-8884
Fax (503) 458-6409 • Web: www.autioco.com

AUTIO MODEL GHP GRINDER

AUTIO company

SPECIALIZED EQUIPMENT FOR THE FOOD INDUSTRY

Autio Gear Head Pulley (GHP) Model Grinders provide trouble-free production, hour after hour. The GHP model features both a gearbox and pulley drive for reliable performance and flexible drive train configuration. The GHP grinder is available in 8" and 11" plate sizes and a variety of finishes, including stainless steel, to satisfy USDA specifications. All GHP model grinders can be fitted with the Autio Positive Displacement Pump to grind and transfer your product in one application.

High capacity hopper, high performance

Dependable Falk Gear Drive reduces downtime

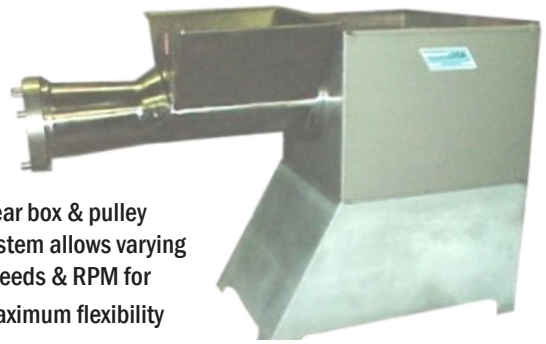

Gear box & pulley system allows varying speeds & RPM for maximum flexibility

Fully shrouded motor and gearbox

AUTIO MODEL GHP GRINDER SPECIFICATIONS

SPECIFICATION	1101GHP	801GHP
DIAMETER OF PLATE	11"	8-5/8" 11"
HEIGHT	50 1/4"	50 1/4"
WIDTH	28"	28"
LENGTH	80 1/2"	80 1/2"
CLEARANCE UNDER BARREL	30-1/2"	31"
HOPPER SIZE	29"x21"	29"x21"
LENGTH OF SCREW	42"	42"
WEIGHT	2400 lbs	2200 lbs
MOTOR SIZES	25/60/50HP	15/25/40/50HP
CAPACITY * (LBS /HOUR)	25,000	15,000

**Capacity will vary depending on product application*

Specifications subject to change without notice

7 Reasons Why you get greater production at lower cost with AUTIO Model GHP Grinders

- ✓ POWERFUL GEAR/PULLEY DRIVE
- ✓ FRESH OR FROZEN APPLICATIONS
- ✓ QUICK CLEAN-UP FOR SAFETY/SANITARY
- ✓ CUSTOM BUILT FOR YOUR PRODUCT LINE
- ✓ SUPER DURABLE & EASY MAINTENANCE
- ✓ MAXIMIZE RETURN ON INVESTMENT
- ✓ LARGE HOPPER BUILT TO ORDER (100 LBS +)

Available in 8" & 11" plate sizes



CHOOSE AN AUTIO GRINDER FOR YOUR PRODUCTION NEEDS:

Autio Grinders are available in several models and sizes, suitable for Fresh, Frozen, Meat, Poultry, Seafood Product Recovery, Waste and Size Reduction. All models can be custom fabricated for your needs and most models can be fitted with an optional vane pump to grind and transfer your product in one application.

Autio Products must be installed and operated in accordance with all applicable health and safety regulations. Guards and safety equipment are not shown in photos.

93750 Autio Loop • Astoria, Oregon 97103 USA
Phone: (503) 458-6191 • (800) 483-8884
Fax (503) 458-6409 • Web: www.autioco.com

AUTIO MODEL GH GRINDER

AUTIO company

SPECIALIZED EQUIPMENT FOR THE FOOD INDUSTRY

Autio GH (Gear Head) Model Grinders provide trouble-free production, hour after hour. The GH model features an in-line gear drive and motor to ensure maximim power and reliable performance for even the toughest product applications. The Autio GH grinder is available in 8" and 11" plate sizes and a variety of finishes, including stainless steel, to satisfy USDA specifications. All GH model grinders can be fitted with the Autio Positive Displacement Vane Pump to grind and transfer your product in one application.

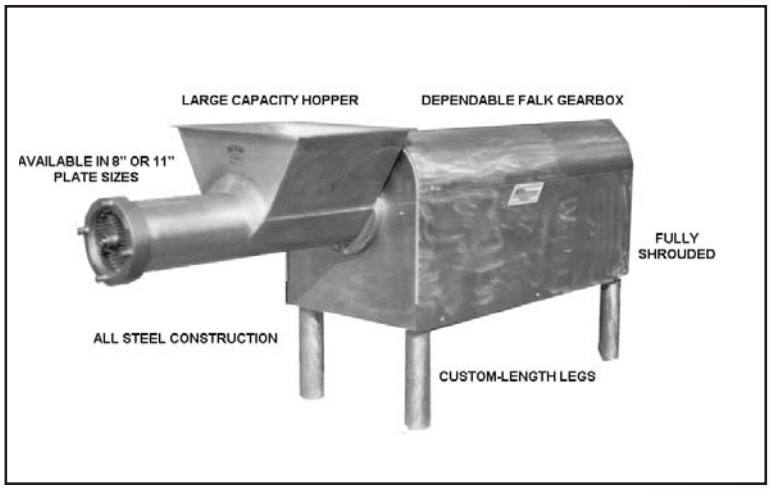

AUTIO MODEL GH GRINDER SPECIFICATIONS

SPECIFICATION	1101GH	801GH	1102GH2
DIAMETER OF PLATE	11"	8-5/8" 11"	11"
HEIGHT	50"	50"	50"
WIDTH	30"	30"	31"
LENGTH	107"	107"	117"
CLEARANCE UNDER BARREL	30-1/2"	30-1/2"	30-1/2"
HOPPER SIZE	27"x21"	27"x21"	27"x21"
LENGTH OF SCREW	42"	42"	21"
WEIGHT	2400 lbs	2400 lbs	3400 LBS
MOTOR SIZES	25/60/50HP	25/60/50HP	75/100HP
CAPACITY * (LBS/HOUR)	25,000	15,000	25,000

Capacity will vary depending on product application
Specifications subject to change without notice

7 Reasons Why you get greater production at lower cost with AUTIO Model GH Grinders

- ✓ DIRECT GEAR DRIVE = NO STALL OR SLIPPAGE
- ✓ FRESH OR FROZEN APPLICATIONS
- ✓ QUICK CLEAN-UP FOR SAFETY/SANITARY
- ✓ CUSTOM BUILT FOR YOUR PRODUCT LINE
- ✓ SUPER DURABLE & EASY MAINTENANCE
- ✓ MAXIMIZE RETURN ON INVESTMENT
- ✓ LARGE HOPPER BUILT TO ORDER (100 LBS +)



CHOOSE AN AUTIO GRINDER FOR YOUR PRODUCTION NEEDS:

Autio Grinders are available in several models and sizes, suitable for Fresh, Frozen, Meat, Poultry, Seafood Product Recovery, Waste and Size Reduction. All models can be custom fabricated for your needs and most models can be fitted with an optional vane pump to grind and transfer your product in one application.

Autio Products must be installed and operated in accordance with all applicable health and safety regulations. Guards and safety equipment are not shown in photos.

AUTIO MODEL P-4 GRINDER

AUTIO company

SPECIALIZED EQUIPMENT FOR THE FOOD INDUSTRY

Autio P-4 Model Grinders provide trouble-free production, hour after hour. The P-4 model features a flywheel-type belt and pulley system and requires no gearbox, making it the lowest cost high production grinder on the market. The P-4 grinder is available in 8" and 11" plate sizes and a variety of finishes, including stainless steel, to satisfy USDA specifications. All P-4 model grinders can be fitted with the Autio Positive Displacement Pump to grind and transfer your product in one application.

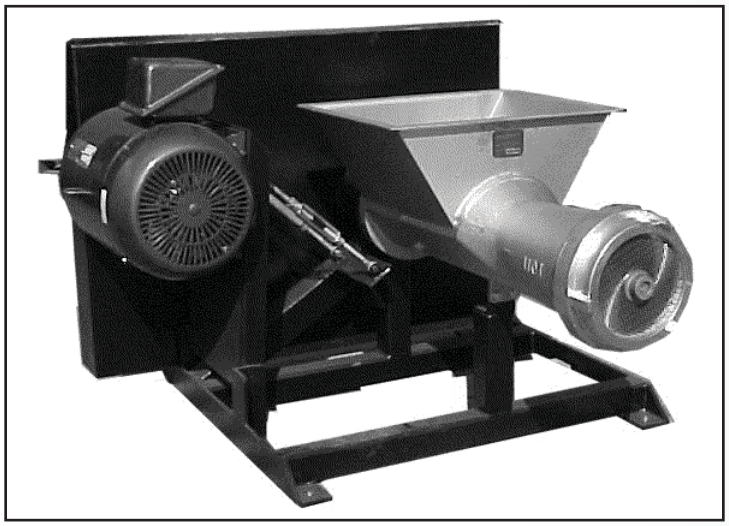

AUTIO MODEL P-4 GRINDER SPECIFICATIONS

SPECIFICATION	1101P-4	801P-4
DIAMETER OF PLATE	11"	8-5/8"
HEIGHT	45"	45"
WIDTH	58"	58"
LENGTH	64"	66"
CLEARANCE UNDER BARREL	30"	30"
HOPPER SIZE	29"x21"	29"x21"
LENGTH OF SCREW	42"	42"
WEIGHT	1500 lbs	1500 lbs
MOTOR SIZES	15-50HP	15-50HP
CAPACITY * (LBS /HOUR)	25,000	15,000

Capacity will vary depending on product application
Specifications subject to change without notice

7 Reasons Why you get greater production at lower cost with AUTIO P-4 Grinders

- ✓ BELT DRIVE = LESS CAPITAL COST
- ✓ FRESH OR FROZEN APPLICATIONS
- ✓ QUICK CLEAN-UP FOR SAFETY/SANITARY
- ✓ CUSTOM BUILT FOR YOUR PRODUCT LINE
- ✓ SUPER DURABLE & EASY MAINTENANCE
- ✓ MAXIMIZE RETURN ON INVESTMENT
- ✓ LARGE HOPPER BUILT TO ORDER (100 LBS +)

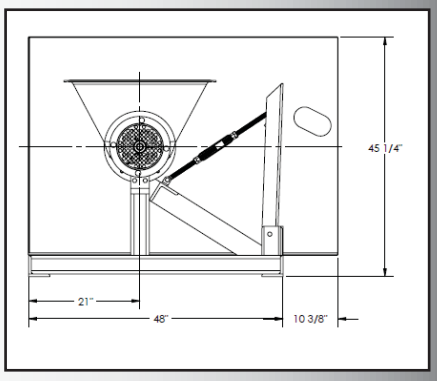

CHOOSE AN AUTIO GRINDER FOR YOUR PRODUCTION NEEDS:

Autio Grinders are available in several models and sizes, suitable for Fresh, Frozen, Meat, Poultry, Seafood Product Recovery, Waste and Size Reduction. All models can be custom fabricated for your needs and most models can be fitted with an optional vane pump to grind and transfer your product in one application.

Autio Products must be installed and operated in accordance with all applicable health and safety regulations. Guards and safety equipment are not shown in photos.

93750 Autio Loop • Astoria, Oregon 97103 USA
Phone: (503) 458-6191 • (800) 483-8884
Fax (503) 458-6409 • Web: www.autioco.com

AUTIO HYDRAULIC GRINDERS

AUTIO company

SPECIALIZED EQUIPMENT FOR THE FOOD INDUSTRY

Autio Hydraulic Grinders provide reliable, trouble-free production, hour after hour. The hydraulic model grinder is ideal for use in seafood processing, meat & poultry and waste disposal/offal applications requiring where space is limited and hydraulic power is available. The 801-H and 1101-H models can be fitted with the Autio Pump to grind and transfer your product in one application.

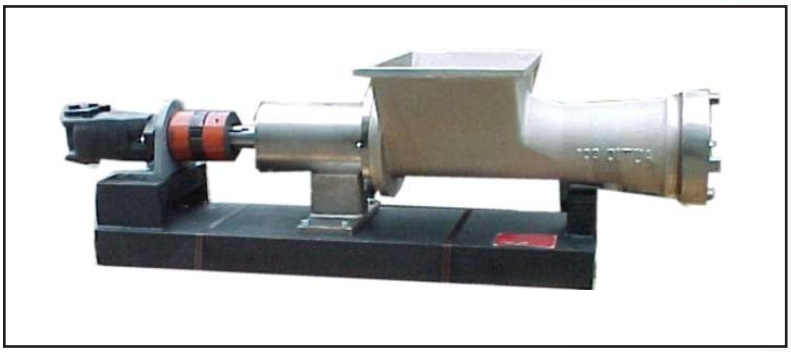

- ✓COMPACT SIZE
- ✓DEPENDABLE HYDRAULIC POWER
- ✓QUICK CLEAN-UP
- ✓CUSTOM BUILT
- ✓SUPER DURABLE
- ✓MAXIMIZE RETURN ON INVESTMENT

HYDRAULIC GRINDER SPECIFICATIONS

SPECIFICATION	1101-H	801-H	601-H
DIAMETER OF PLATE	11"	8-5/8"	6"
HEIGHT	23-1/2"	23-1/2"	20"
WIDTH	28"	28"	14 1/2"
LENGTH	68"	68"	47 1/2"
CLEARANCE UNDER BARREL	4"	4"	4"
HOPPER SIZE	29"x 21"	29"x 21"	12 1/4"x 8 3/4"
LENGTH OF SCREW	42"	42"	21"
WEIGHT	1000 lbs	1000 lbs	500 LBS
MOTOR SIZES	CharLynn 10,000	CharLynn 10,000	CharLynn 2,000
CAPACITY * (LBS PER HOUR)	20,000	15,000	3.000

Capacity will vary depending on product application



CHOOSE AN AUTIO GRINDER FOR YOUR PRODUCTION NEEDS:

Autio Grinders are available in several models and sizes, suitable for Fresh, Frozen, Meat, Poultry, Seafood Product Recovery, Waste and Size Reduction. All models can be custom fabricated for your needs and most models can be fitted with an optional vane pump to grind and transfer your product in one application.

Autio Products must be installed and operated in accordance with all applicable health and safety regulations. Guards and safety equipment are not shown in photos.

93750 Autio Loop • Astoria, Oregon 97103 USA
Phone: (503) 458-6191 • (800) 483-8884
Fax (503) 458-6409 • Web: www.autioco.com